DOLPHIN 110-3.5-GJ

CODE NUMBER

3950110

DESCRIPTION

3.5 gpf, Polished Chrome Finish, Fixture Connection Top Spud, Single Flush, Ground Joint Control Stop, Dolphin Exposed Manual Water Closet Flushometer.

DETAILS

- Flush Volume: 3.5 gpf (13.2 Lpf)
- Finish: Polished Chrome (CP)
- Valve: Piston
- Valve Body Material: Red Brass
- Fixture Type: Water Closet
- Fixture Connection: Top Spud
- Rough-In Dimension: 11 ½" (292mm)
- Spud Coupling: 1 ½" (38mm)
- Supply Pipe: 1" (25mm)
- Control Stop: Ground Joint (GJ)

FEATURES

- Flush volume is factory set with option of adjusting volume range according to specific needs
- Flushing control mechanism functions in oil and is isolated from debris
- Water pressure not required to positively shut off
- Complies with military specifications
- Regulating screw for flush duration control
- Adjustable tailpiece
- Valve body, Cover, Tailpiece and Control Stop shall be in compliance with ASTM Alloy Classification for Red Brass
- Valve shall be in compliance to the applicable sections of ASSE 1037.

COMPLIANCES & CERTIFICATIONS

(BAA Compliant, BABAA Compliant, UPC Certified, Made in the USA)

RECOMMENDED SPECIFICATION

Valve Body, Cover, Tailpiece and Control Stop shall be in conformance with ASTM Alloy Classification for Semi- Red Brass. Valve shall be in compliance with the applicable sections of ASSE 1037 and ANSI/ASME 112.19.2.

VALVE OPERATING PRESSURE (FLOWING)

15–80 PSI (103–552 kPa). Specific fixtures may require greater minimum flowing pressure - consult manufacturer requirements.

DOWNLOADS

- Dolphin Standard Exposed Installation Instructions
- Control Stop Repair and Maintenance Guide
- Flush Connections Flanges Repair and Maintenance Guide
- Tail Piece Repair and Maintenance Guide
- Dolphin Repair and Maintenance Guide
- Additional Downloads

NOTES

All information contained within this document subject to change without notice.

Looking for other variations of the DOLPHIN 110 product? View the general spec sheet with all options.

WARRANTY

View Warranty Information

Sloan 10500 Seymour Ave, Franklin Park, IL 60131
Phone: 800.982.5839 • Fax: 800.447.8329 • sloan.com

ROUGH-IN

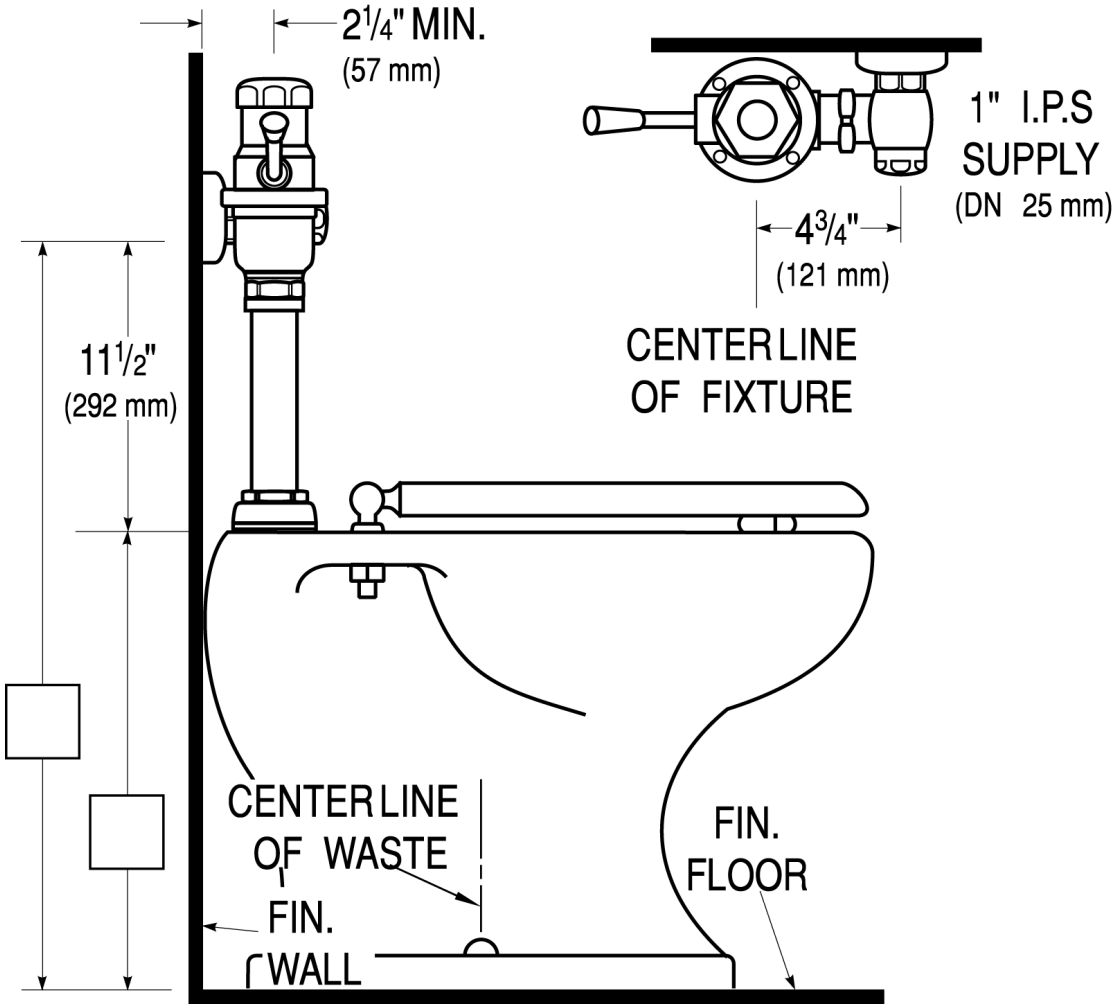

Sloan 10500 Seymour Ave, Franklin Park, IL 60131
Phone: 800.982.5839 • Fax: 800.447.8329 • sloan.com